REV.	ECN	DESCRIPTION	CHECKED	APPROVED
1	EC-04-187	REV 1←REV A CHANGED.	2004/12/6 M.MIZUNO	2004/12/6 M.NAGASAWA

REQUEST APPROVAL
CUSTOMER
APPROVED BY Kevin Luesner KEVIN LUESNER
DATE FEB 13 2005
PLEASE RETURN ONE COPY TO IG

REVISED PRINT
REV. No. 1
DATE : 2004. 12. 6

IG U412-6 ENG

* THIS DIMENSION APPLIES ONLY WHEN SHAFT IS IN EXTREME RIGHT POSITION (➡)
END PLAY: 0.5 MAX.

DIRECTION OF ROTATION

CCW ⟷ CW

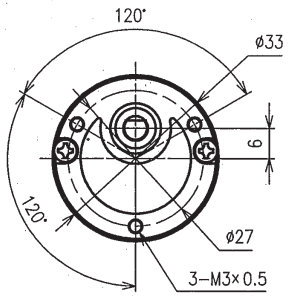

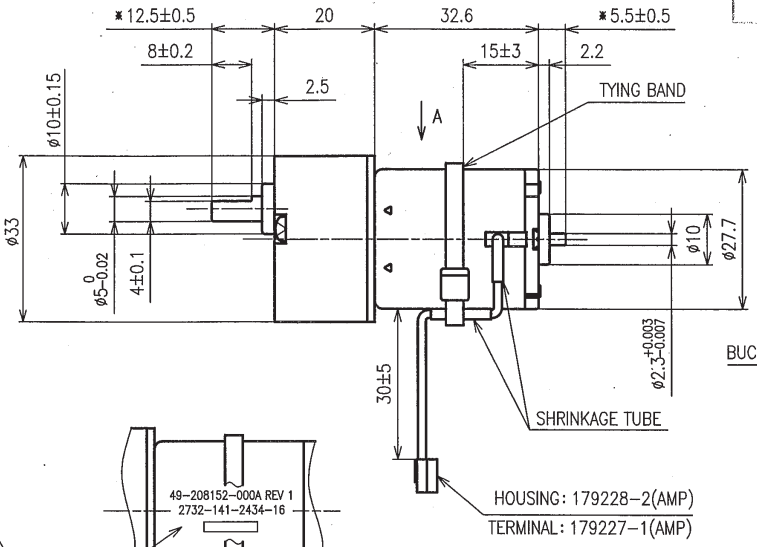

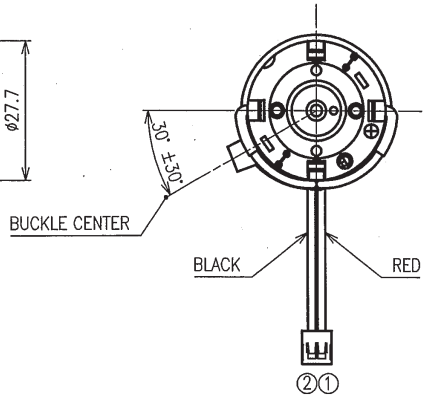

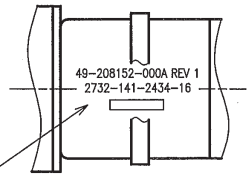

VIEW A

1
INK-JET PRINTING
49-208152-000A REV 1
2732-141-2434-16

4-DIGIT DATE CODE

GEAR MOTOR SPECIFICATIONS (1:50)	
OPERATING VOLTAGE	DC 5 V
NO LOAD SPEED	50±7.5 RPM
NO LOAD CURRENT	0.2 A MAX.
NOMINAL TORQUE	5.5 OZ-IN
NOMINAL SPEED	40±6 RPM
NOMINAL CURRENT	0.25 A MAX.

ELECTRICAL NOISE SUPPRESION CIRCUIT

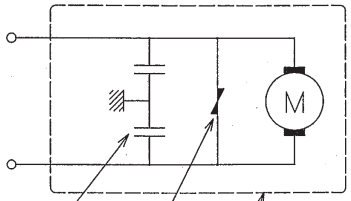

CAPACITOR 2-0.1μF
VARISTOR
MOTOR CASE

CROSSLINE CONTENTS

PIN NO.	COLOR	WIRE CLASS	POLARITY – DIRECTION OF ROTATION	
1	RED	UL1007・AWG#24	(+)	(−)
2	BLACK	UL1007・AWG#24	(−)	(+)
			CCW CCW ROTATION VIEWED FROM OUTPUT SHAFT	CW CW ROTATION VIEWED FROM OUTPUT SHAFT

ALL DIMENSIONS ARE MILLIMETERS				IGARASHI ELECTRIC WORKS LTD.	
	SCALE 尺度 1:1	DECIMAL 寸法公差 ± 0.3	ANGULAR 角度公差 ± 3°		
DRAWN	2004/11/16 T.TERAGUCHI	NAME ギヤモータ外形図 GEAR MOTOR OUTLINE		MODEL NO. 33GN2732-141-G-5	
CHECKED	2004/11/16 M.MIZUNO			ITEM CODE GA-2732-0013	
APPROVED	2004/11/16 M.NAGASAWA	CUSTOMER		DRAWING NO. DWGM-2732-0094	REV. 01

3A02

B08-04 A3